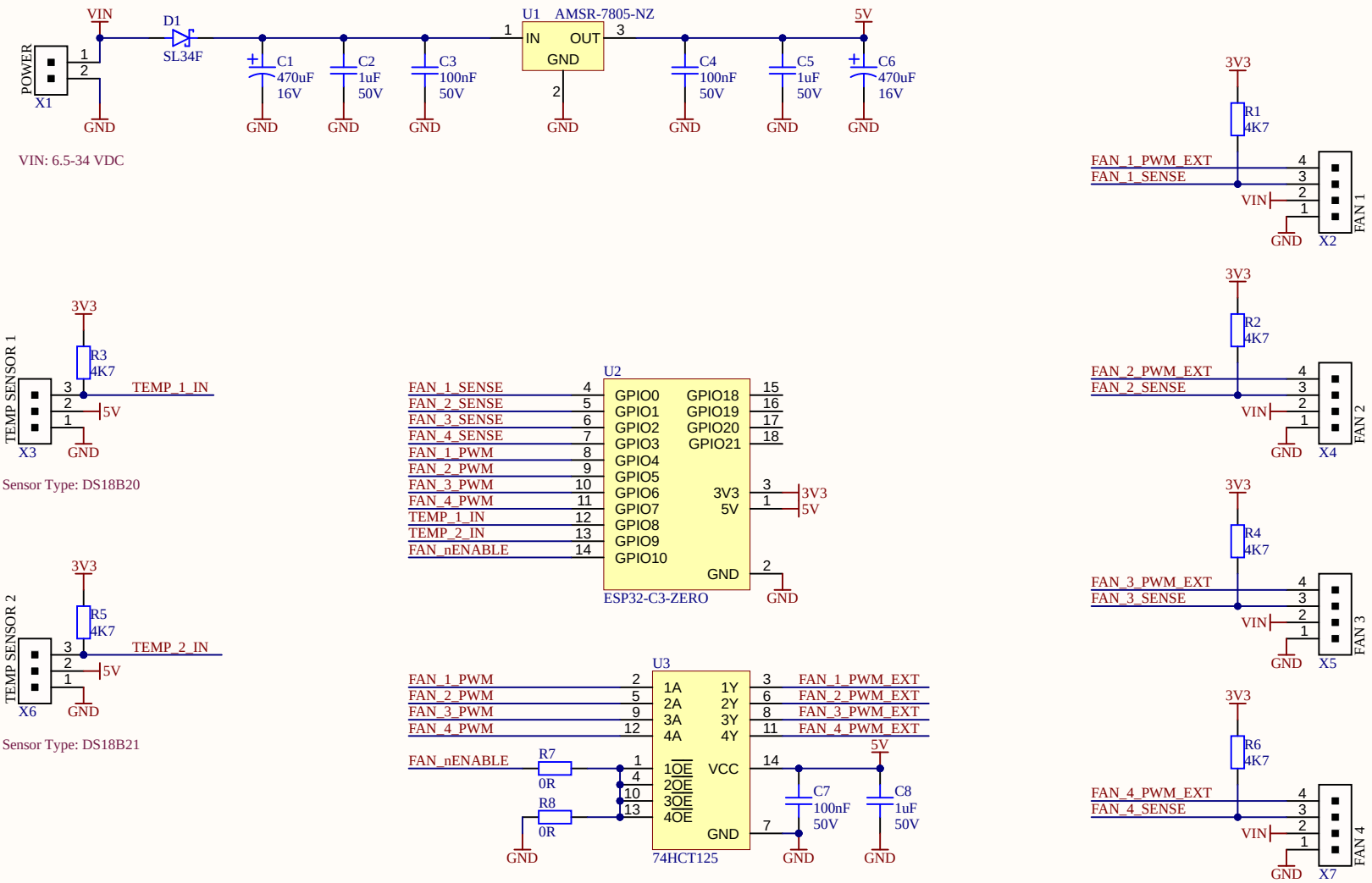

PROJECT NAME	Rack Temperature & Fan Controller		
DATE 2026. 03. 11.	TIME 17:38:33	VERSION CONTROL N/A	
TITLE	ESP32-C3 Rack Fan Controller		
SIZE A4	FILE NAME Temperature Controller.SchDoc		REV Rev.1.0.
DRAWN BY: Szabó Péter	SCALE: 1:1	DWG NO. SP-8001	SHEET 1 OF 1